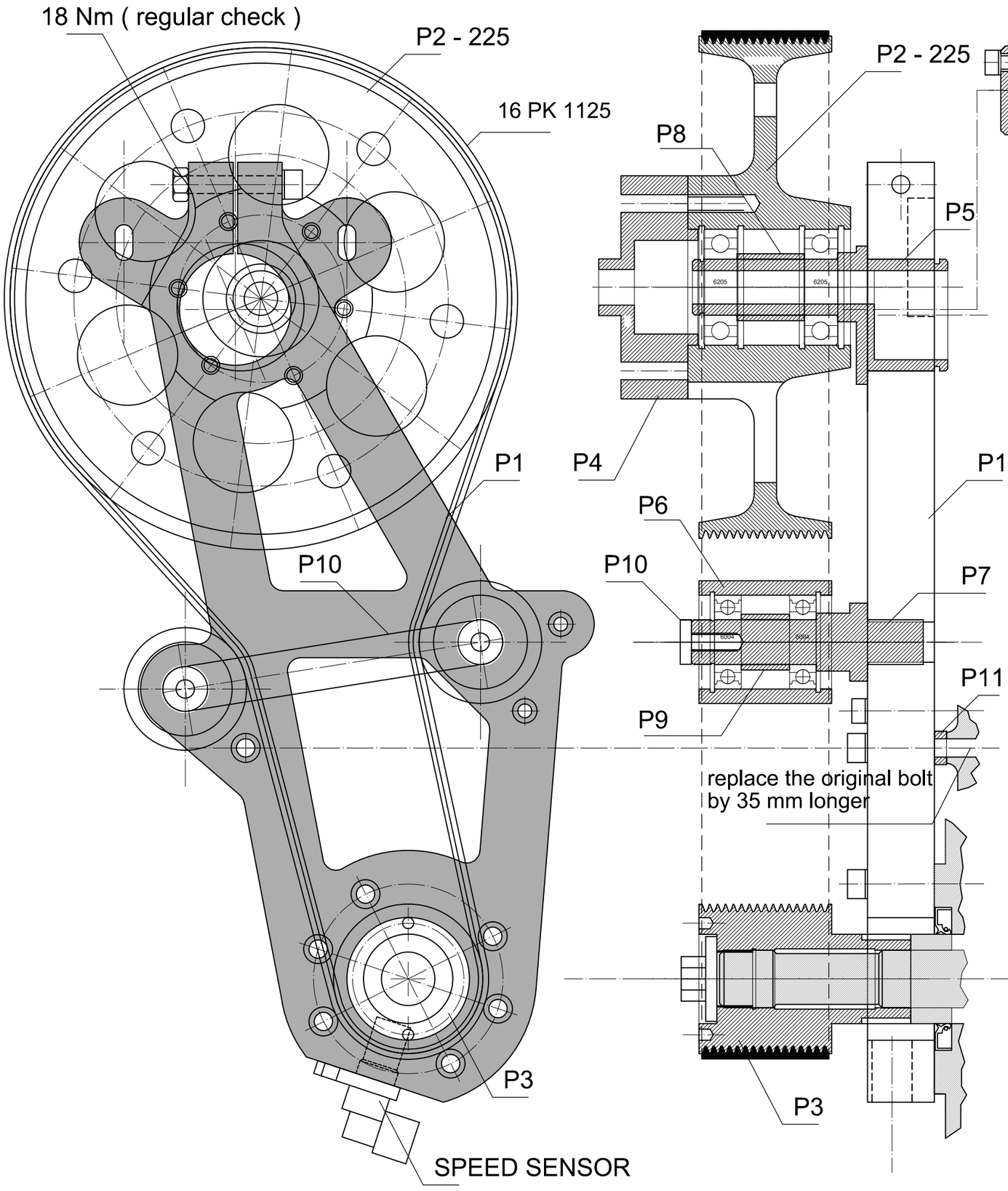

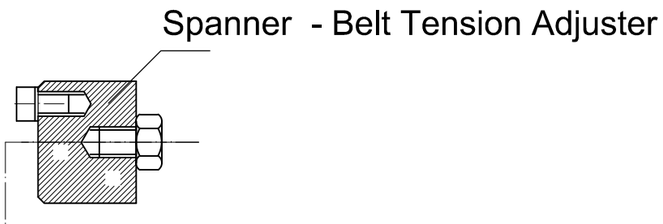

Washers	-	-	DIN 125
Bolts	-	-	DIN 912 8.8
Belt	1	16 PK 1125	Optibelt
Retaining ring	4	52 mm	DIN 472 - for bore
Retaining ring	4	42 mm	DIN 472 - for bore
Retaining ring	1	50 mm	DIN 471 - for shaft
Retaining ring	1	25 mm	DIN 471 - for shaft
Retaining ring	2	20 mm	DIN 471 - for shaft
Bearing	4	6004-2Z	2Z - high rpm !
Bearing	2	6205-2RS	-
Spanner	1	Spanner	steel / -
P11	1	spacer	Al 2024 T3 / -
P10	1	plate	Al 2024 T3 / -
P9	2	bushing	Al 2024 T3 / -
P8	1	bushing	Al 2024 T3 / -
P7	2	shaft	Al 2024 T3 / -
P6	2	pulley	Al 2024 T3 / anodized
P5	1	eccentric shaft	25CrMo4 alloy / zinc plating
P4	1	spacer	Al 2024 T3 / anodized
P3	1	belt pulley	40X alloy / plasma nitriding
P2-225	1	belt pulley	Al 2024 T3 / anodized
P1	1	base plate	Al 7075 T6 / -
PART NO	QTY	DESCRIPTION	MATERIAL / SURFACE FINISH

list A3				date 11.2017	scale 1:2
project FJS600_BR_3.35_03	drawing assembly drawing				
	PPGtrike.com			revision 0	sheet 1/14

Drawings to be used for non-commercial purposes only !
PPGtrike.com is not responsible for any damages or material loss caused in connection with the information and drawings provided.The user of the drawings uses them at his / her own risk.

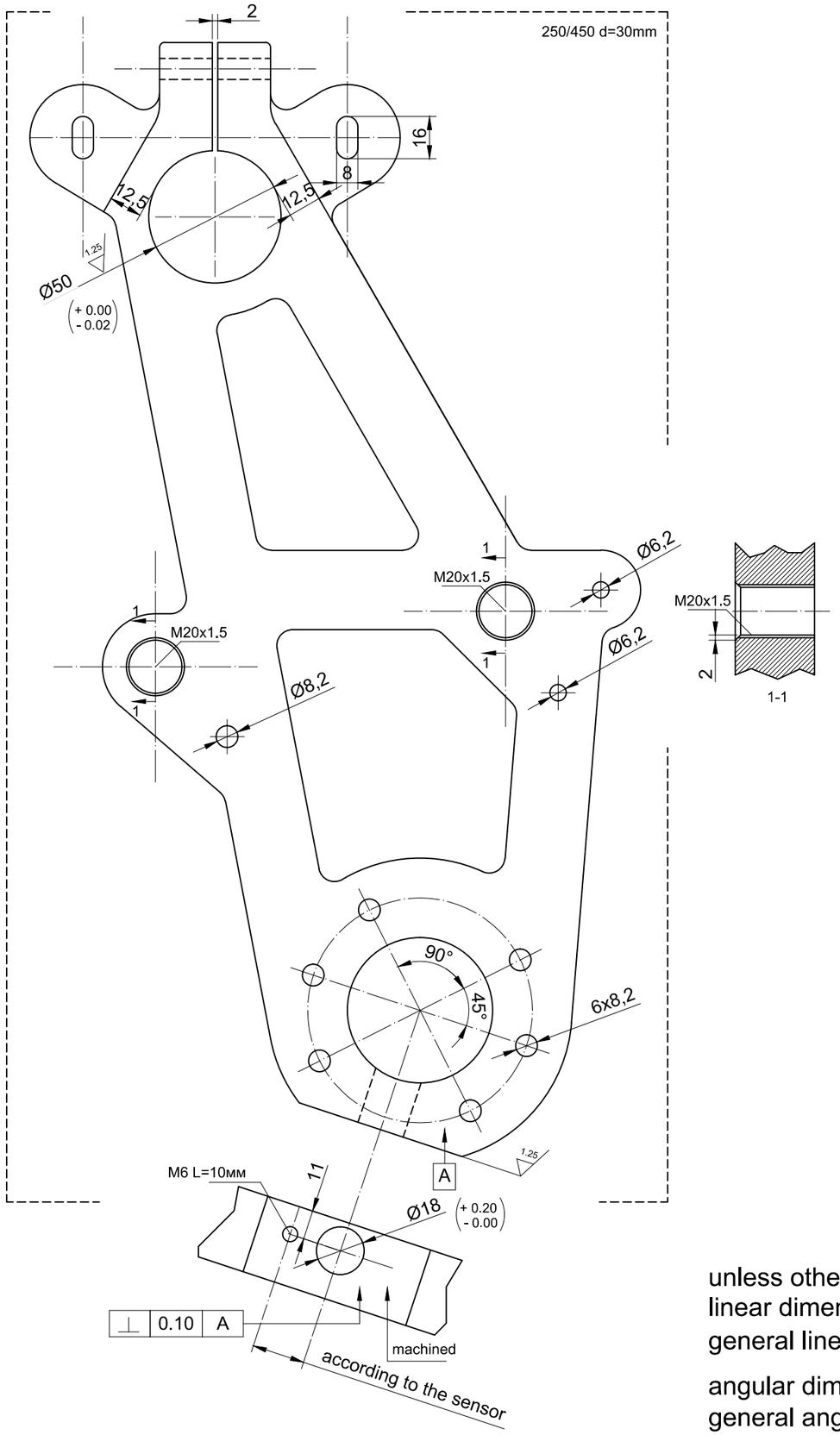

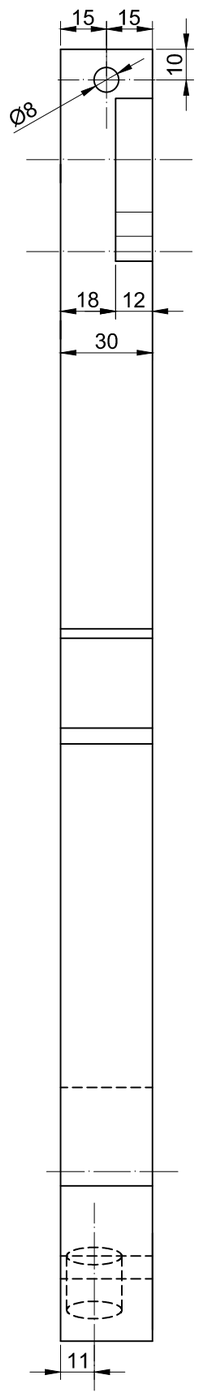

unless otherwise specified

linear dimensions	mm	
general linear tolerance		(+ 0.2 / - 0.2)
angular dimensions	degrees	
general angular tolerance		(+0.1° / -0.1°)

PART NO	QTY	DESCRIPTION	MATERIAL / SURFACE FINISH
P1	1	base plate	Al 7075 T6 / -

list A3				date 11.2017	scale 1:2
project FJS600_BR_3.35_03	drawing P1				
	PPGtrike.com			revision 0	sheet 2/14

Drawings to be used for non-commercial purposes only !
PPGtrike.com is not responsible for any damages or material loss caused in connection with the information and drawings provided.The user of the drawings uses them at his / her own risk.

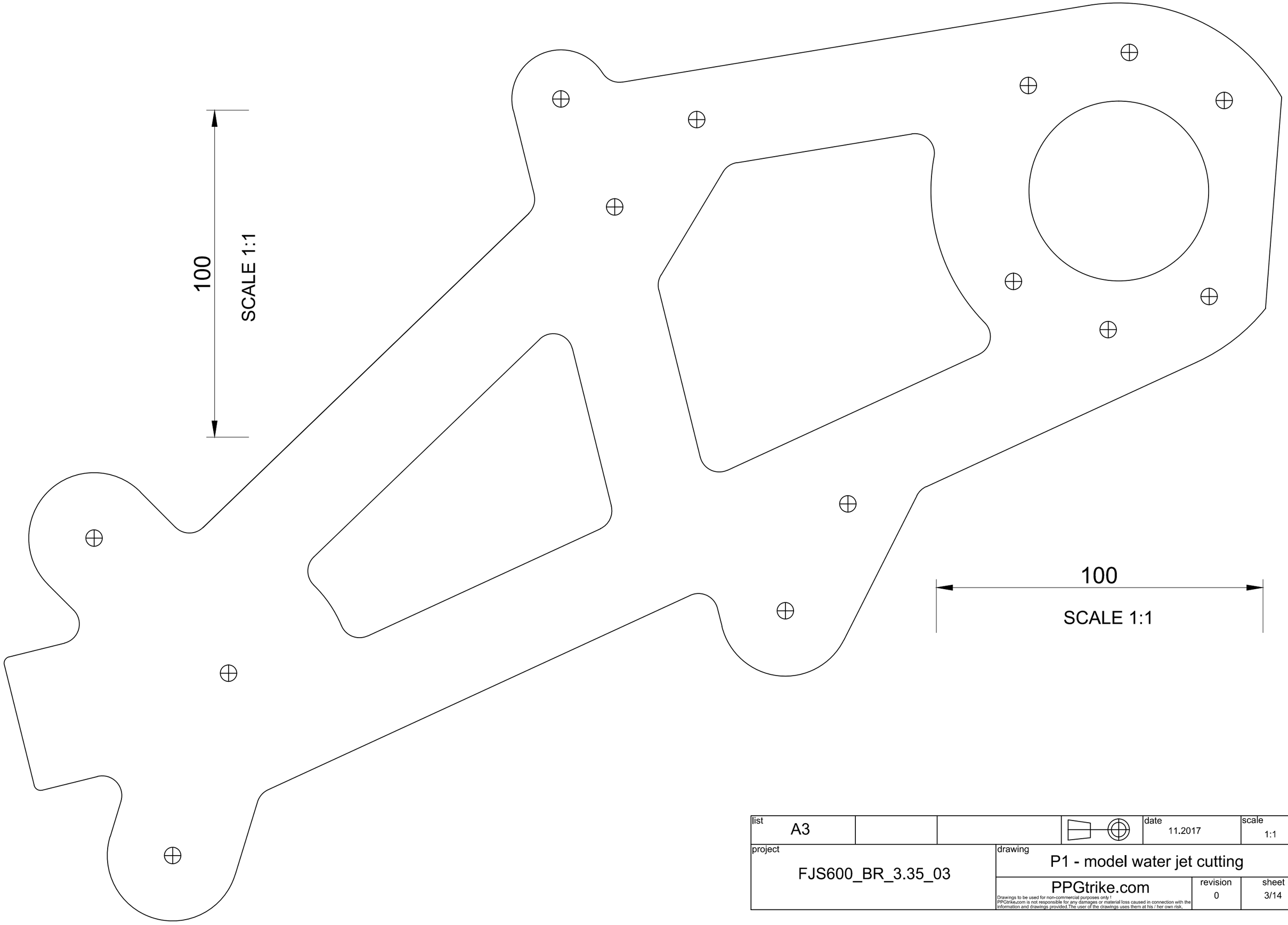

list A3				date 11.2017	scale 1:1
project FJS600_BR_3.35_03			drawing P1 - model water jet cutting		
			PPGtrike.com Drawings to be used for non-commercial purposes only ! PPGtrike.com is not responsible for any damages or material loss caused in connection with the information and drawings provided.The user of the drawings uses them at his / her own risk.	revision 0	sheet 3/14

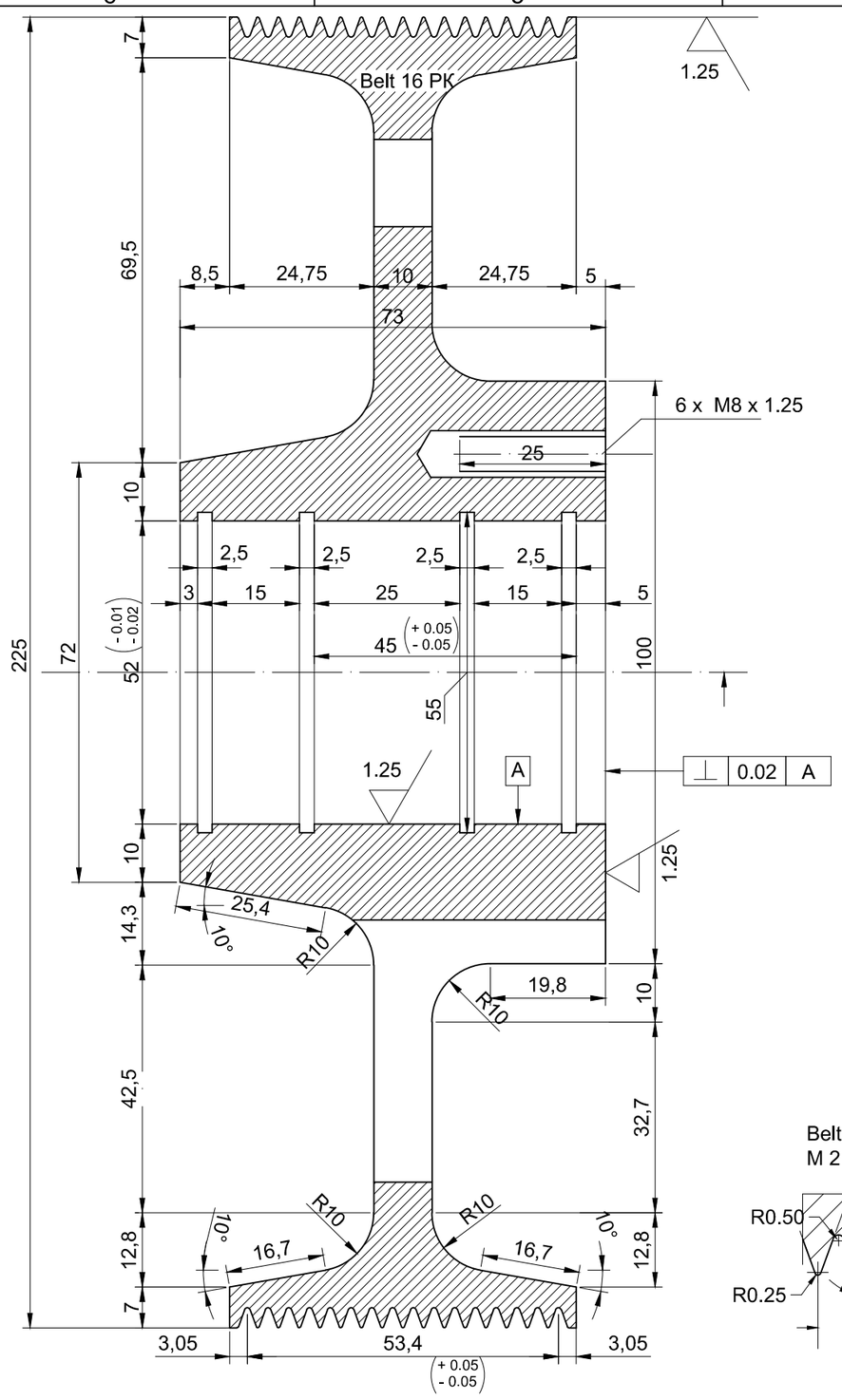

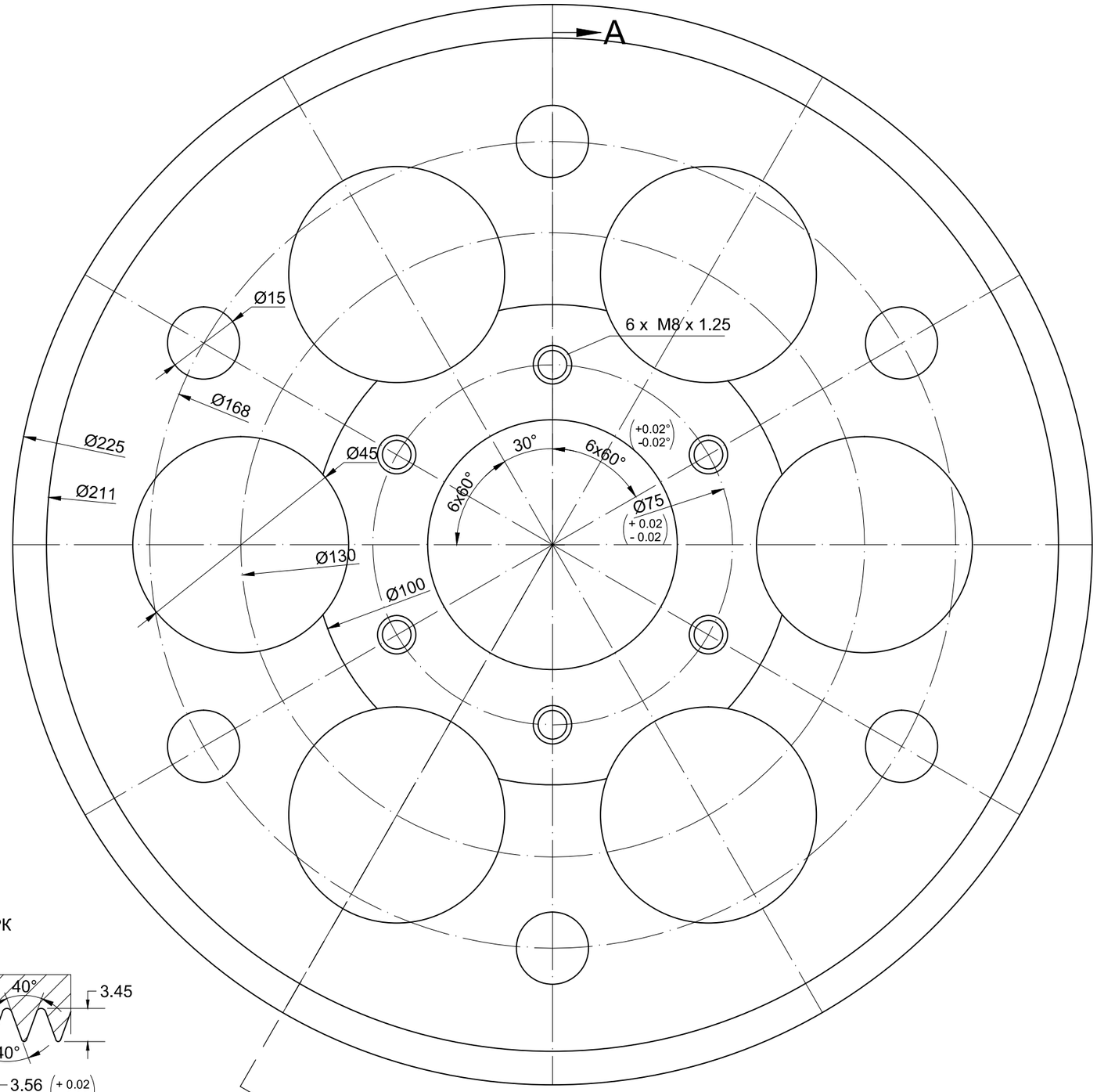

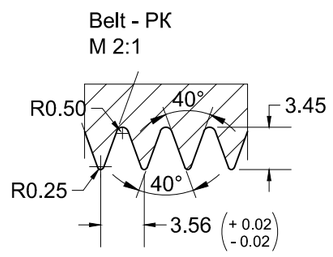

unless otherwise specified

linear dimensions	mm	
general linear tolerance		(+0.2 -0.2)
angular dimensions	degrees	
general angular tolerance		(+0.1° -0.1°)

P2-225	1	belt pulley	Al 2024 T3 / anodized
PART NO	QTY	DESCRIPTION	MATERIAL / SURFACE FINISH

list A3			date 11.2017	scale 1:1
project FJS600_BR_3.35_03	drawing P2-225			
	PPGtrike.com		revision 0	sheet 4/14

Drawings to be used for non-commercial purposes only !
PPGtrike.com is not responsible for any damages or material loss caused in connection with the information and drawings provided.The user of the drawings uses them at his / her own risk.

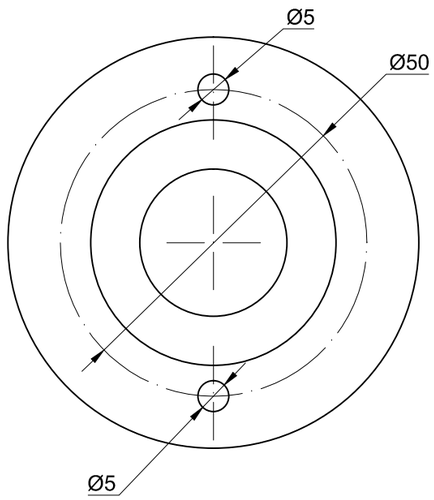

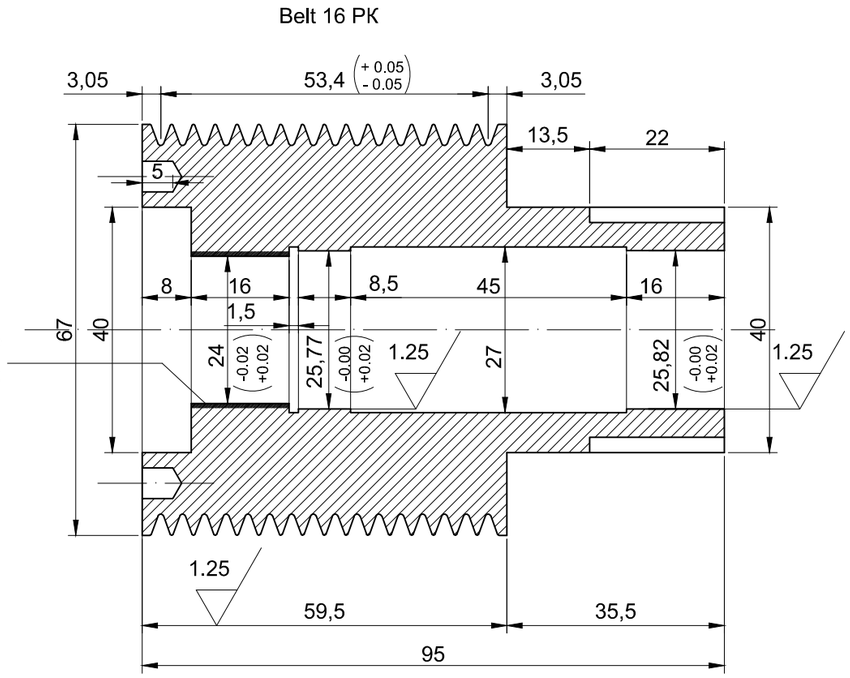

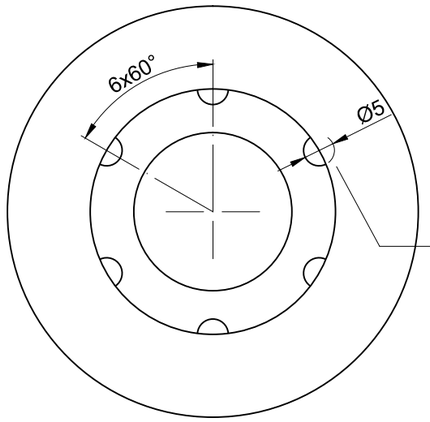

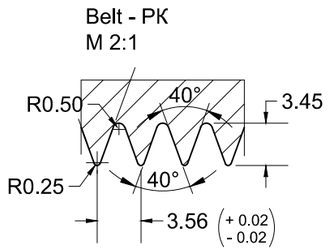

P3	1	belt pulley	40X alloy / plasma nitriding
PART NO	QTY	DESCRIPTION	MATERIAL / SURFACE FINISH

unless otherwise specified

linear dimensions	mm	
general linear tolerance		(+ 0.2 / - 0.2)
angular dimensions	degrees	
general angular tolerance		(+0.1° / -0.1°)

list A3				date 11.2017	scale 1:1
project FJS600_BR_3.35_03		drawing P3			
		PPGtrike.com Drawings to be used for non-commercial purposes only ! PPGtrike.com is not responsible for any damages or material loss caused in connection with the information and drawings provided.The user of the drawings uses them at his / her own risk.		revision 0	sheet 5/14

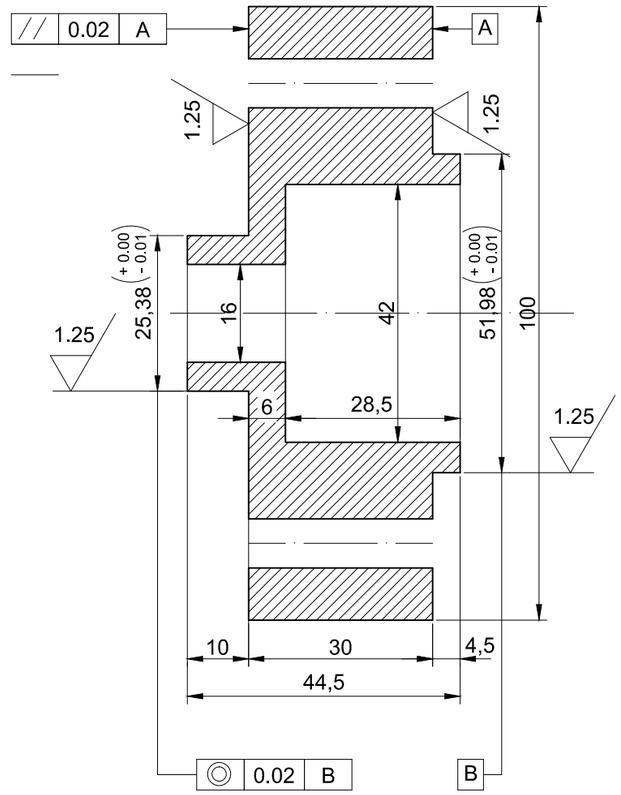

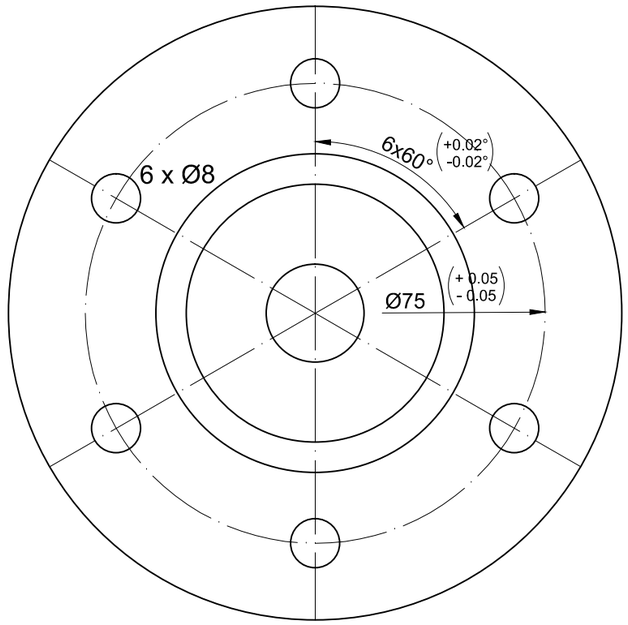

P4	1	spacer	Al 2024 T3 / anodized
PART NO	QTY	DESCRIPTION	MATERIAL / SURFACE FINISH

unless otherwise specified

linear dimensions	mm	
general linear tolerance		(+0.2 -0.2)
angular dimensions	degrees	
general angular tolerance		(+0.1° -0.1°)

list A3				date 11.2017	scale 1:1
project FJS600_BR_3.35_03	drawing P4				
	PPGtrike.com			revision 0	sheet 6/14

Drawings to be used for non-commercial purposes only !
PPGtrike.com is not responsible for any damages or material loss caused in connection with the information and drawings provided.The user of the drawings uses them at his / her own risk.

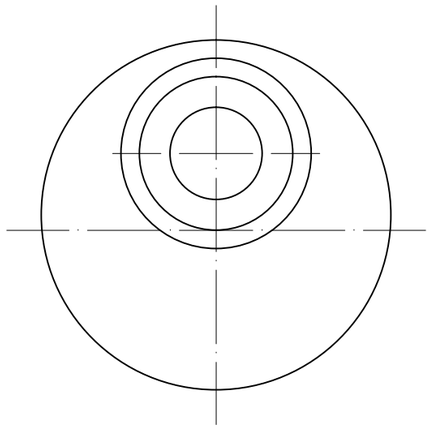

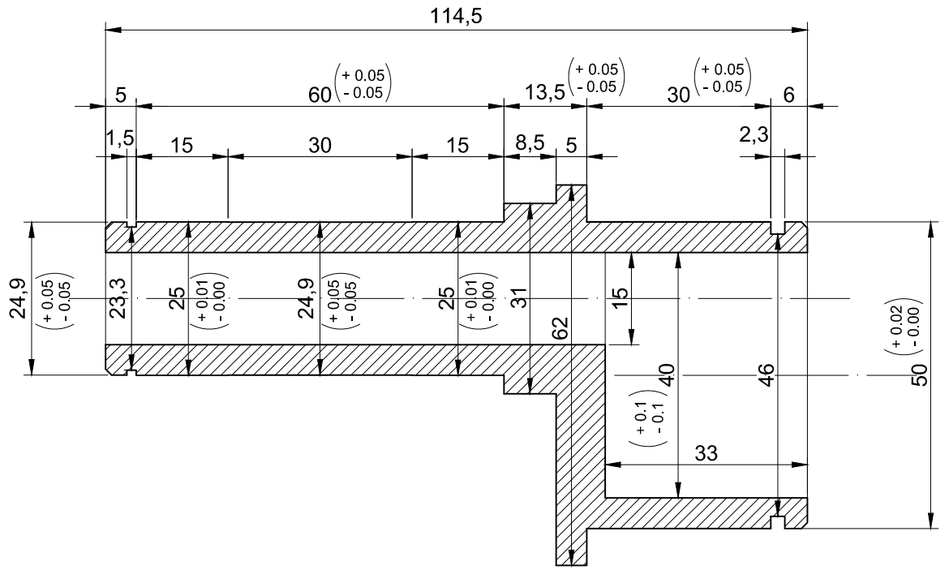

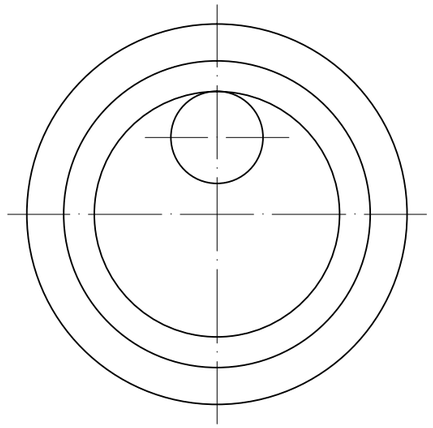

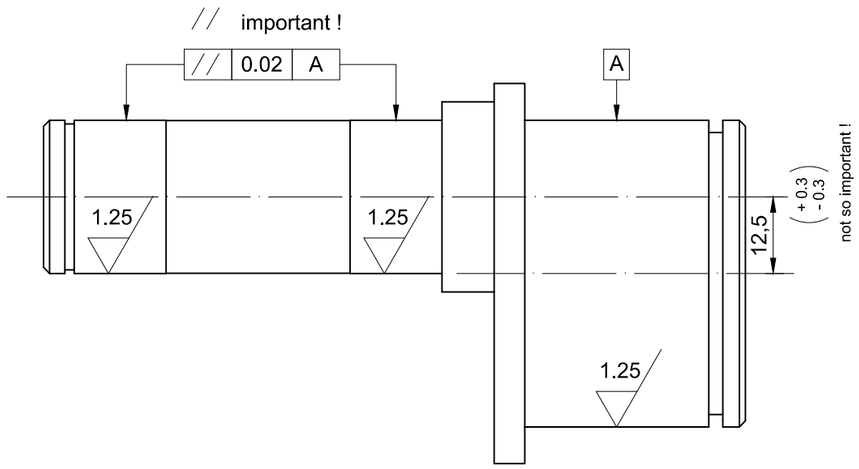

P5	1	eccentric shaft	25CrMo4 alloy / zinc plating
PART NO	QTY	DESCRIPTION	MATERIAL / SURFACE FINISH

unless otherwise specified

linear dimensions	mm	
general linear tolerance		(+0.2 / -0.2)
angular dimensions	degrees	
general angular tolerance		(+0.1° / -0.1°)

list A3				date 11.2017	scale 1:1
project FJS600_BR_3.35_03			drawing P5		
			PPGtrike.com	revision 0	sheet 7/14

Drawings to be used for non-commercial purposes only !
PPGtrike.com is not responsible for any damages or material loss caused in connection with the information and drawings provided.The user of the drawings uses them at his / her own risk.

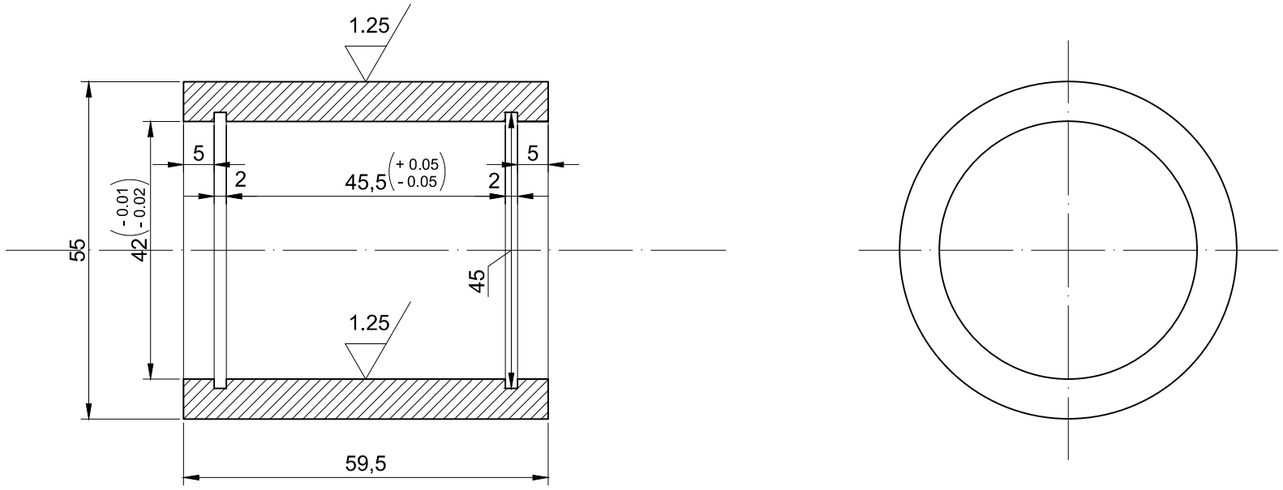

P6	2	pulley	Al 2024 T3 / anodized
PART NO	QTY	DESCRIPTION	MATERIAL / SURFACE FINISH

unless otherwise specified

linear dimensions	mm	
general linear tolerance		(+0.2 / -0.2)
angular dimensions	degrees	
general angular tolerance		(+0.1° / -0.1°)

list A3				date 11.2017	scale 1:1
project FJS600_BR_3.35_03		drawing P6			
		PPGtrike.com		revision 0	sheet 8/14

Drawings to be used for non-commercial purposes only !
PPGtrike.com is not responsible for any damages or material loss caused in connection with the information and drawings provided.The user of the drawings uses them at his / her own risk.

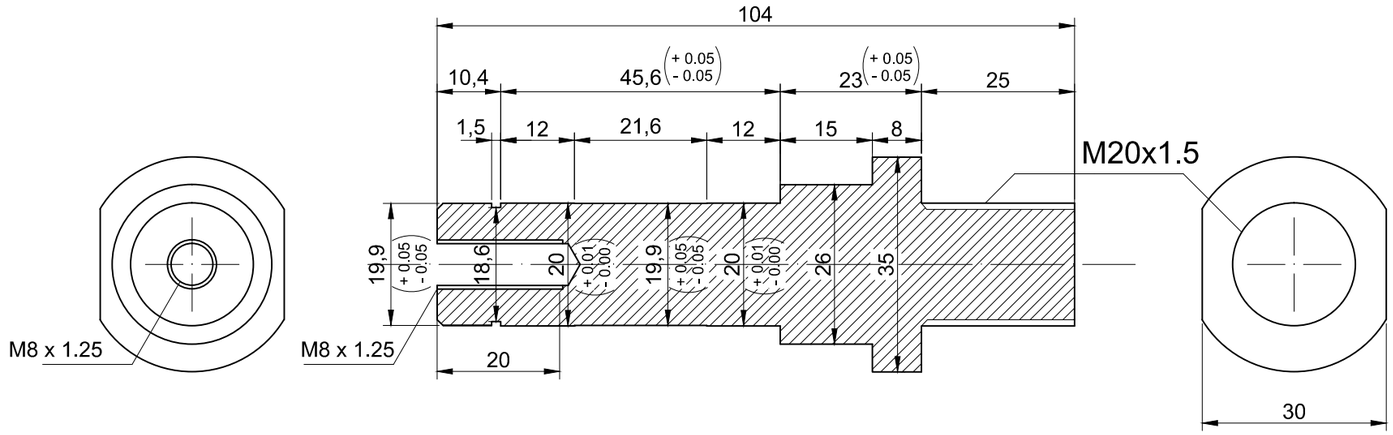

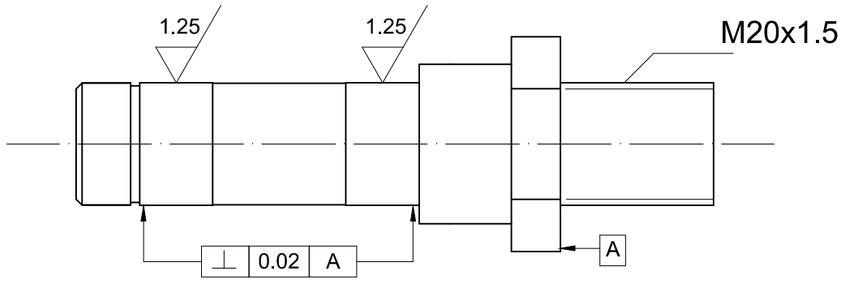

P7	2	shaft	Al 2024 T3 / -
PART NO	QTY	DESCRIPTION	MATERIAL / SURFACE FINISH

unless otherwise specified
linear dimensions mm
general linear tolerance (+ 0.2 / - 0.2)
angular dimensions degrees
general angular tolerance (+0.1° / -0.1°)

list				date	scale
A3				11.2017	1:1

project	drawing		
FJS600_BR_3.35_03	P7		
	PPGtrike.com	revision	sheet
		0	9/14

Drawings to be used for non-commercial purposes only !
PPGtrike.com is not responsible for any damages or material loss caused in connection with the information and drawings provided.The user of the drawings uses them at his / her own risk.

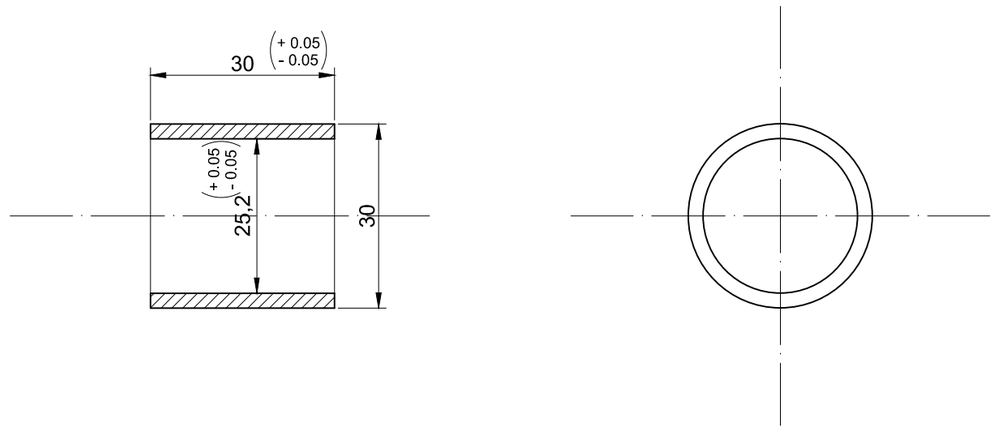

P8	1	bushing	Al 2024 T3 / -
PART NO	QTY	DESCRIPTION	MATERIAL / SURFACE FINISH

unless otherwise specified
linear dimensions mm
general linear tolerance (+ 0.2 / - 0.2)
angular dimensions degrees
general angular tolerance (+0.1° / -0.1°)

list A3				date 11.2017	scale 1:1
project FJS600_BR_3.35_03			drawing P8		
			PPGtrike.com	revision 0	sheet 10/14

Drawings to be used for non-commercial purposes only !
PPGtrike.com is not responsible for any damages or material loss caused in connection with the information and drawings provided.The user of the drawings uses them at his / her own risk.

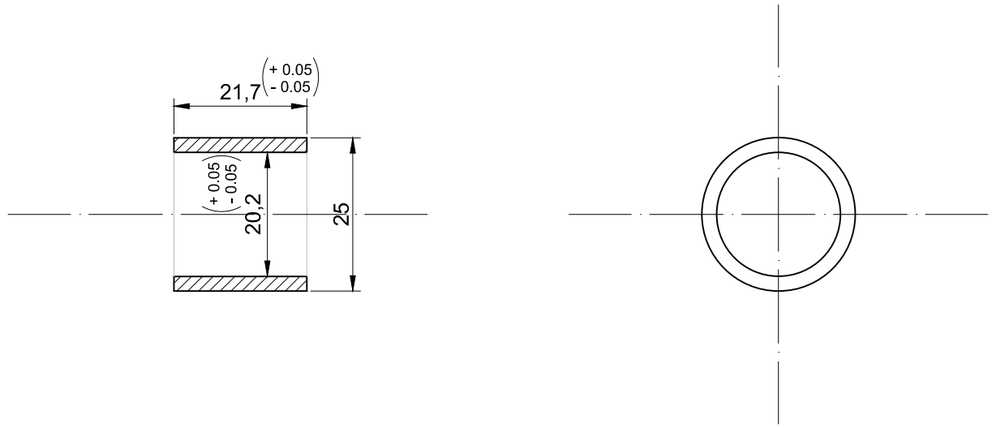

PART NO	QTY	DESCRIPTION	MATERIAL / SURFACE FINISH
P9	2	bushing	Al 2024 T3 / -

unless otherwise specified

linear dimensions	mm	
general linear tolerance		(+ 0.2 / - 0.2)
angular dimensions	degrees	
general angular tolerance		(+0.1° / -0.1°)

list A3				date 11.2017	scale 1:1
project FJS600_BR_3.35_03		drawing P9			
		PPGtrike.com		revision 0	sheet 11/14

Drawings to be used for non-commercial purposes only !
PPGtrike.com is not responsible for any damages or material loss caused in connection with the information and drawings provided.The user of the drawings uses them at his / her own risk.

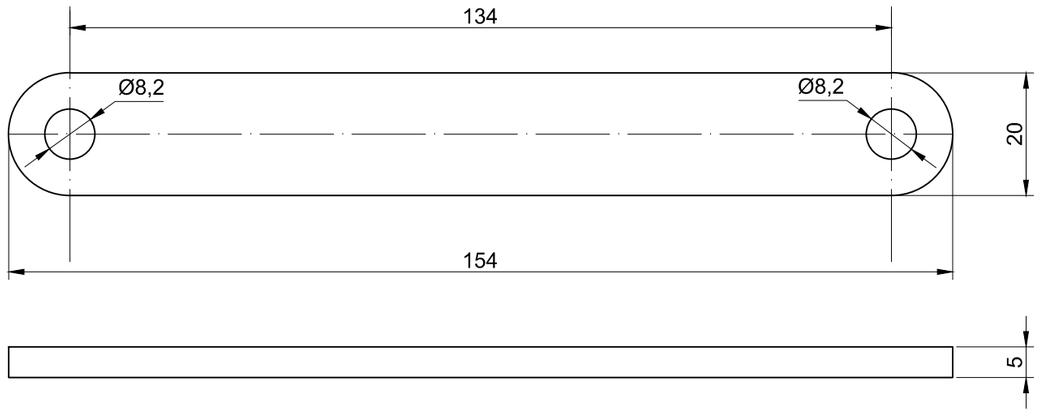

P10	1	plate	Al 2024 T3 / -
PART NO	QTY	DESCRIPTION	MATERIAL / SURFACE FINISH

unless otherwise specified
linear dimensions mm
general linear tolerance (+ 0.2 / - 0.2)
angular dimensions degrees
general angular tolerance (+0.1° / -0.1°)

list A3				date 11.2017	scale 1:1
project FJS600_BR_3.35_03			drawing P10		
			PPGtrike.com	revision 0	sheet 12/14

Drawings to be used for non-commercial purposes only !
PPGtrike.com is not responsible for any damages or material loss caused in connection with the information and drawings provided.The user of the drawings uses them at his / her own risk.

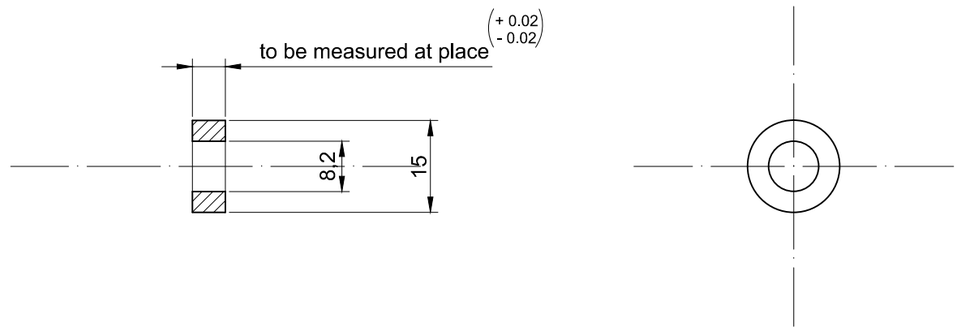

P11	1	spacer	Al 2024 T3 / -
PART NO	QTY	DESCRIPTION	MATERIAL / SURFACE FINISH

unless otherwise specified

linear dimensions	mm	
general linear tolerance		(+ 0.2 / - 0.2)
angular dimensions	degrees	
general angular tolerance		(+0.1° / -0.1°)

list A3				date 11.2017	scale 1:1
project FJS600_BR_3.35_03		drawing P11			
		PPGtrike.com Drawings to be used for non-commercial purposes only ! PPGtrike.com is not responsible for any damages or material loss caused in connection with the information and drawings provided.The user of the drawings uses them at his / her own risk.		revision 0	sheet 13/14

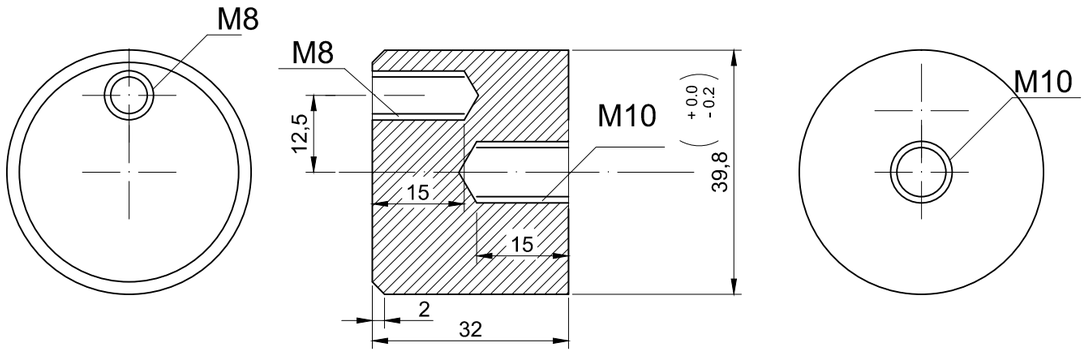

Spanner	1	Spanner	steel / -
PART NO	QTY	DESCRIPTION	MATERIAL / SURFACE FINISH

unless otherwise specified
linear dimensions mm
general linear tolerance (+ 0.2 / - 0.2)
angular dimensions degrees
general angular tolerance (+0.1° / -0.1°)

list A3				date 11.2017	scale 1:1
project FJS600_BR_3.35_03		drawing Spanner			
		PPGtrike.com		revision 0	sheet 14/14

Drawings to be used for non-commercial purposes only !
PPGtrike.com is not responsible for any damages or material loss caused in connection with the information and drawings provided.The user of the drawings uses them at his / her own risk.